Career Launcher MBA

QA Geometry

Review Test

A sphere of radius r is cut by a plane at a distance of h from its center, thereby breaking this sphere into two different pieces. The total surface area of these two pieces is 25% more than that of the original sphere. Find h.

(1) $\frac{r}{\sqrt{2}}$ (2) $\frac{r}{\sqrt{3}}$ (3) $\frac{r}{\sqrt{5}}$ (4) $\frac{r}{\sqrt{6}}$

Question – 1

A 150-foot rope is suspended at its two ends from the tops of two 100-foot flagpoles. The lowest point of the rope is 25 feet from the ground. What is the distance between the two flagpoles?

(1) 75 ft (2) 100 ft (3) 120 ft

(4) 87.5 ft (5) None of these

Question – 2

If ABCD is a square with area 625, and CEFD is a rhombus with area 500, then the area of the shaded region is:

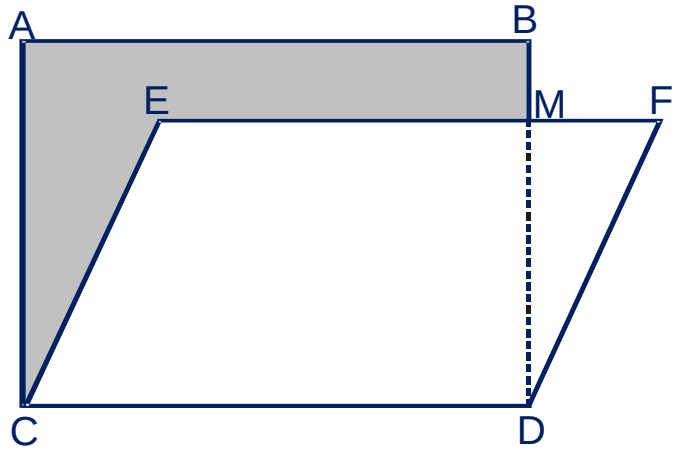

(1) 125 (2) 175 (3) 200

(4) 250 (5) 275

Question – 3

Two mutually perpendicular chords AB and CD meet at a point P inside the circle such that AP = 6 cm, PB = 4 cm and DP = 3 cm. What is the area of the circle?

(1) $\frac{125\pi}{4}$ sq cm

(2) $\frac{100\pi}{7}$ sq cm

(3) $\frac{125\pi}{8}$ sq cm

(4) $\frac{52\pi}{3}$ sq cm

Question – 4

A string is wound around two circular disk as shown. If the radius of the two disk are 40 cm and 30 cm respectively. What is the total length of the string?

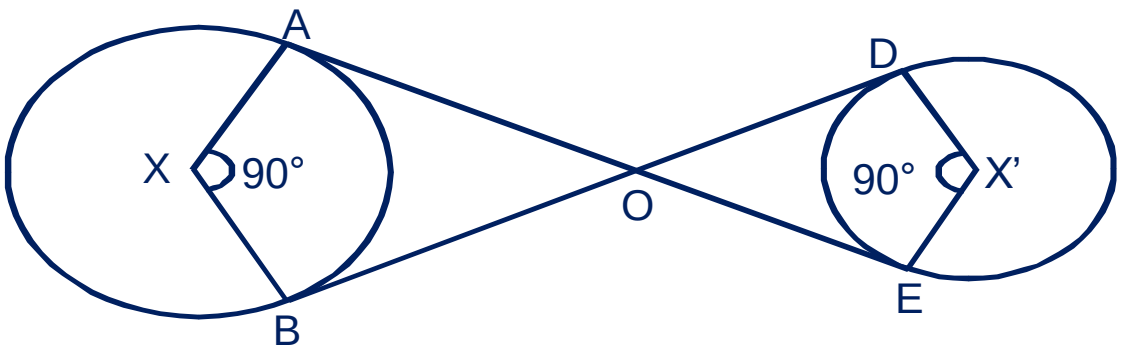

(1) 70 cm

(2) 70 + 165 π

(3) 70 + 120 π

(4) $70 + \frac{165\pi}{2}$

(5) 140 + 105 π

Question – 5

All three circles are tangent to the same line and to each other. Circles C2 and C3 have equal radii. Find the radius of C2 if the radius of C1 is equal to 10 cm.

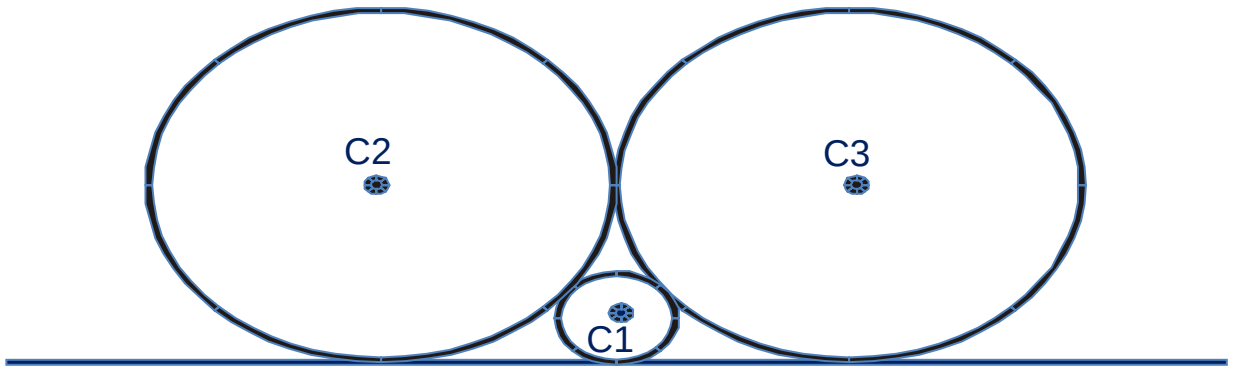

(1) 30 cm

(2) 40 cm

(3) 45 cm

(4) 50 cm

Question – 6

Which of the following can be the perimeter of an isosceles triangle with sides 4 cm and 8 cm.

(1) 16 cm

(2) 20 cm

(3) Both (1) and (2)

(4) None of these

Question – 7

Anil grows tomatoes in his backyard which is in the shape of a square. Each tomato takes 1 cm^2 in his backyard. This year, he has been able to grow 131 more tomatoes than last year. The shape of the backyard remained a square. How many tomatoes did Anil produce this year?

(1) 4225

(2) 4096

(3) 4356

(4) Insufficient Data

Question – 8

There are 5 concentric circles that are spaced equally from each other by 1.25 cm. The innermost circle has a square of side $\sqrt{(32)}$ cm inscribed in it. If a square needs to be inscribed in the outermost circle, what will be its area?

(1) 324 sq. cm.

(2) $(66 + 40\sqrt{2})$ sq. cm.

(3) 210.125 sq. cm.

(4) 162 sq.cm.

Question – 9

a, b and c are three integral sides of an obtuse angled triangle. If ab = 4, find c?

(1) 2

(2) 3

(3) 1

(4) More than 1 value of c can exist

Question – 10

A straight line through point P of a triangle PQR intersects the side QR at the point S and circumcircle of the triangle PQR at the point T. If S is not the centre of the circumcircle, then which of the following is true?

(1) $(1/PS) + (1/ST) < 2/\sqrt{(QS)(QR)}$

(2) $(1/PS) + (1/ST) < 4/QR$

(3) $(1/PS) + (1/ST) > 1/\sqrt{(QS)(QR)}$

(4) $(1/PS) + (1/ST) > 4/QR$

Question – 11

A circle is inscribed in the semi-circle as shown. What could be the radius of the circle?

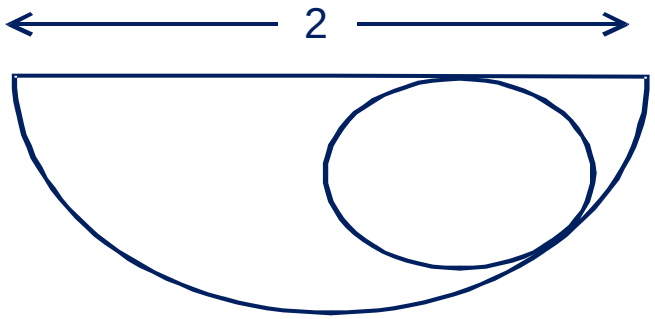

(1) $\sqrt{2}+12$

(2) $12-\sqrt{2}$

(3) $\sqrt{2}-1$

(4) $4+\sqrt{2}$

Question – 12

There are 2 concentric circles, one big and one small. A square ABCD is inscribed inside the big circle while the same square circumscribes the small circle. The square touches the small circle at points P, Q, R and S. Determine the ratio of circumference of big circle to the polygon PQRS.

(1) $\pi : 2$

(2) $2 : \pi$

(3) $2 : \sqrt{2}$

(4) $\pi : \sqrt{2}$

Question – 13

What is the circumference of the below circle given that AB is the diameter and XY is perpendicular to AB?

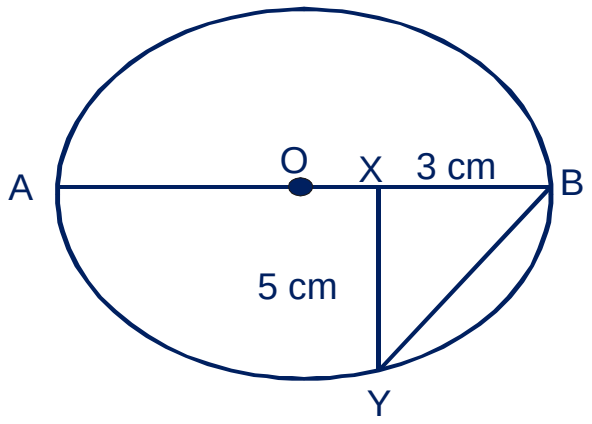

(1) 8π cm

(2) $\pi\sqrt{34}$ cm

(3) $\frac{34\pi}{3}$ cm

(4) $\frac{\pi\sqrt{31}}{3}$ cm

Question – 14

In the following figure, PQRS is the square of side 10 cm and $AP = \frac{1}{3}AF$.

Find the ratio of area of shaded region to the whole hexagon.

(Given ABCDEF is a Regular Hexagon)

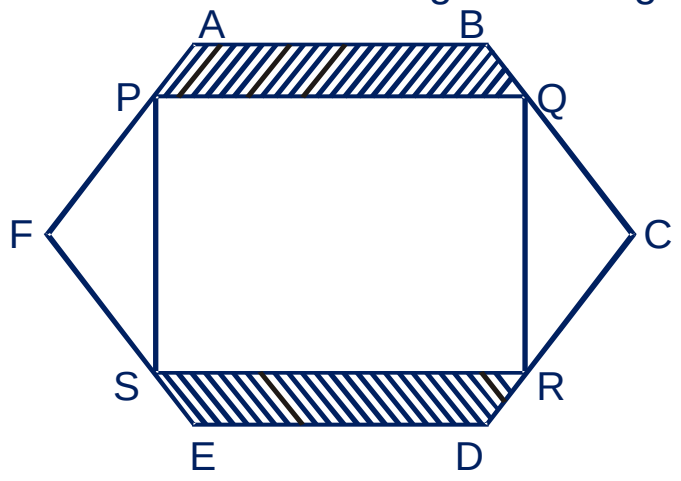

(1) 4 : 9

(2) 7 : 27

(3) 9 : 16

(4) 3 : 13

Question – 15

In the following figure ABCD is a parallelogram of area 160 cm^2. AD = 10 cm, CD = 20 cm.

Find the length of AC?

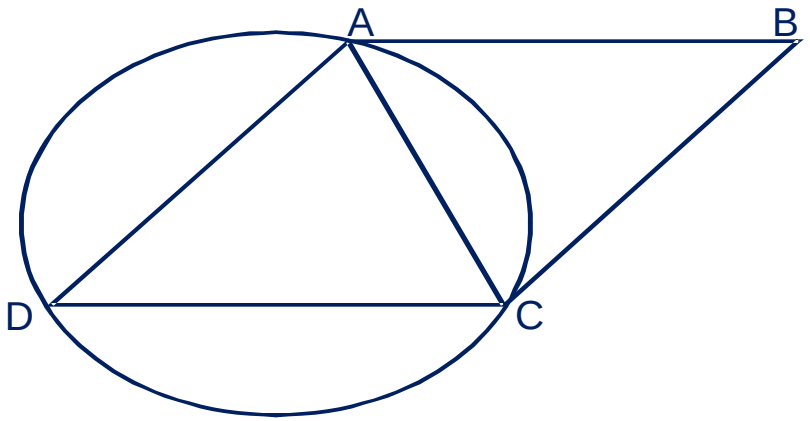

(1) 10

(2) 15

(3) $\sqrt{250}$

(4) $\sqrt{260}$

Question – 16

The line $y = \frac{2}{\sqrt{3}}x + 4$ is tangent to a circle centre at the origin. Find the radius of the circle.

Question – 17

Let PQ and PT be the tangent of the circle whose centre is at O. AB is also a tangent. Find the ∠AOB if ∠APB = 60°.

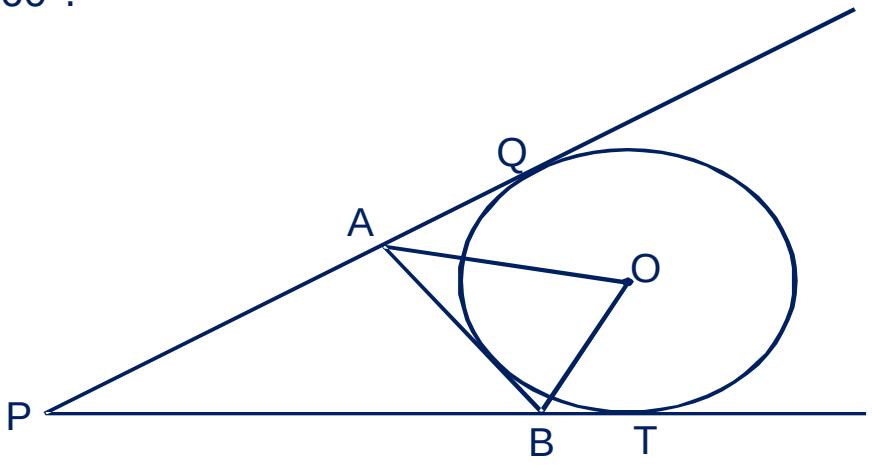

(1) 50°

(2) 60°

(3) 70°

(4) 90°

Question – 18

In this figure ABGH, BCFG and CDEF are three identical squares. What is the sum of $\alpha + \beta + \gamma$.

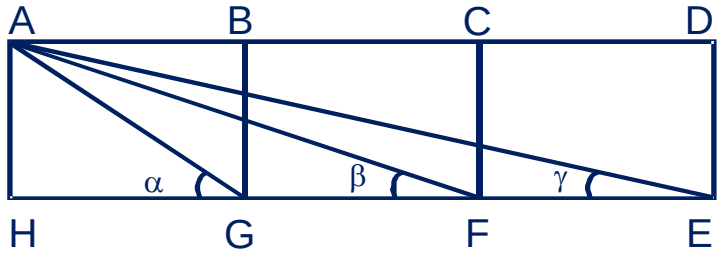

(1) 90°

(2) 120°

(3) 135°

(4) 150°

Question – 19

ABCD is a square of length 20 cm. F and E are the mid-points. What is the area of ΔBIF.

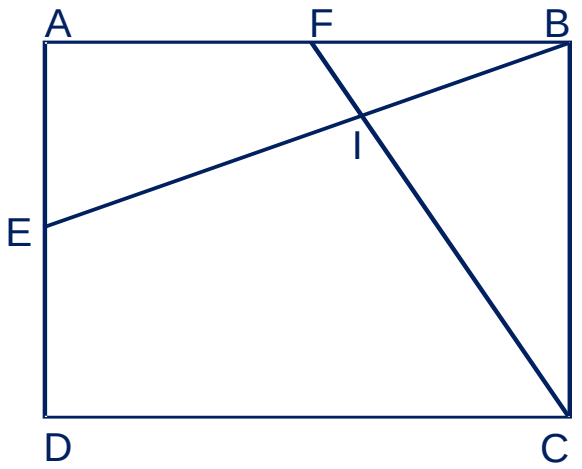

(1) 20 cm^2

(2) 25 cm^2

(3) 30 cm^2

(4) 40 cm^2

Question – 20

In the given figure, ΔABC is an equilateral triangle with sides $\sqrt{3}+1$ cm and ΔPQR is another equilateral triangle with sides 1 cm and is placed anywhere inside the larger triangle such that sides of smaller triangle is parallel to the sides of longer triangle.

Find (PM + QN + RO)

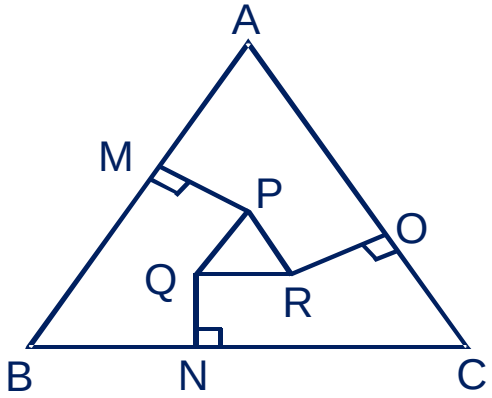

(1) 2

(2) 1

(3) 3/2

(4) Cannot be determined

Question – 21

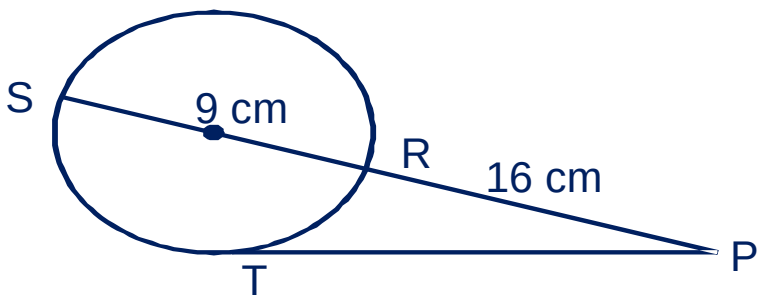

Find the area of ΔRST (approx.), where PT is a tangent and SR is the diameter

(1) 12 cm^2

(2) 16 cm^2

(3) 24 cm^2

(4) 20 cm^2

Question – 22

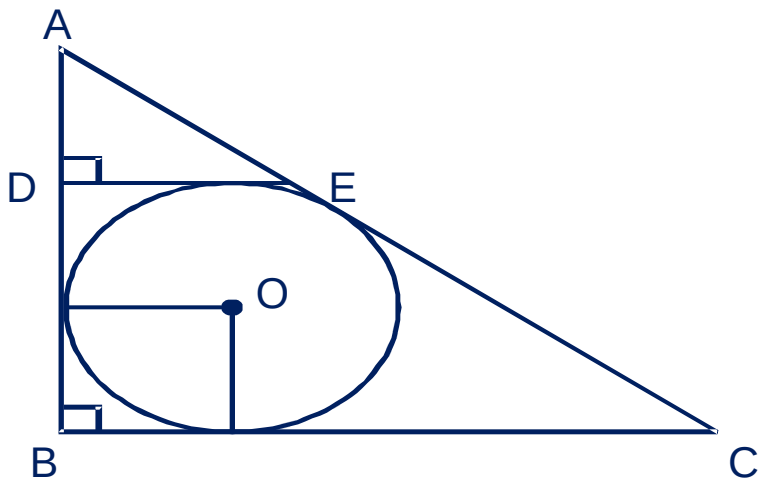

In the given figure,

DE = 3 cm

r = 2 cm

Area (ΔADE) = ?

(1) 8 cm^2

(2) 6 cm^2

(3) 12 cm^2

(4) 16 cm^2

Question – 23

How many right angled triangles having integral sides with base 16 units are possible such that a circle having radius equals to an even integer can be inscribed in it?

(1) 3

(2) 7

(3) 2

(4) Data insufficient

Question – 24

In the given figure PR is the diameter of the circle, centered at O, and ∠PRQ = 30° such that area of ΔPQR = $50\sqrt{3}\ cm^2$. Chord AB intersect PQ at C such that PC : CQ = 4 : 1. Then find the minimum possible length of chord AB.

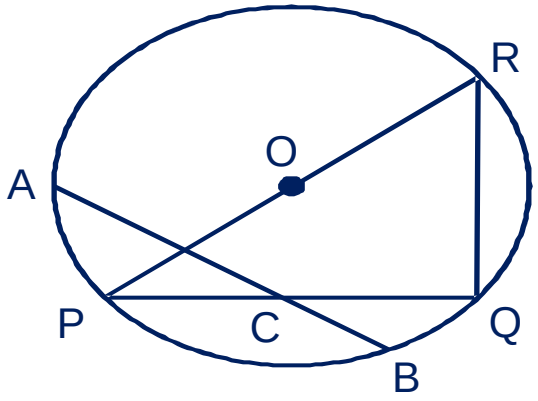

(1) 8 cm

(2) 12 cm

(3) 16 cm

(4) 10 cm

Question – 25

Thanks!